BRUNNER FIREPLACES

Eck-Kamin 57/82/48

lifting door (easy-lift)

State: 2018-01-30

BRUNNER®
made in germany.

Dimension sheets - Eck-Kamin 57/82/48 lifting door (easy-lift)

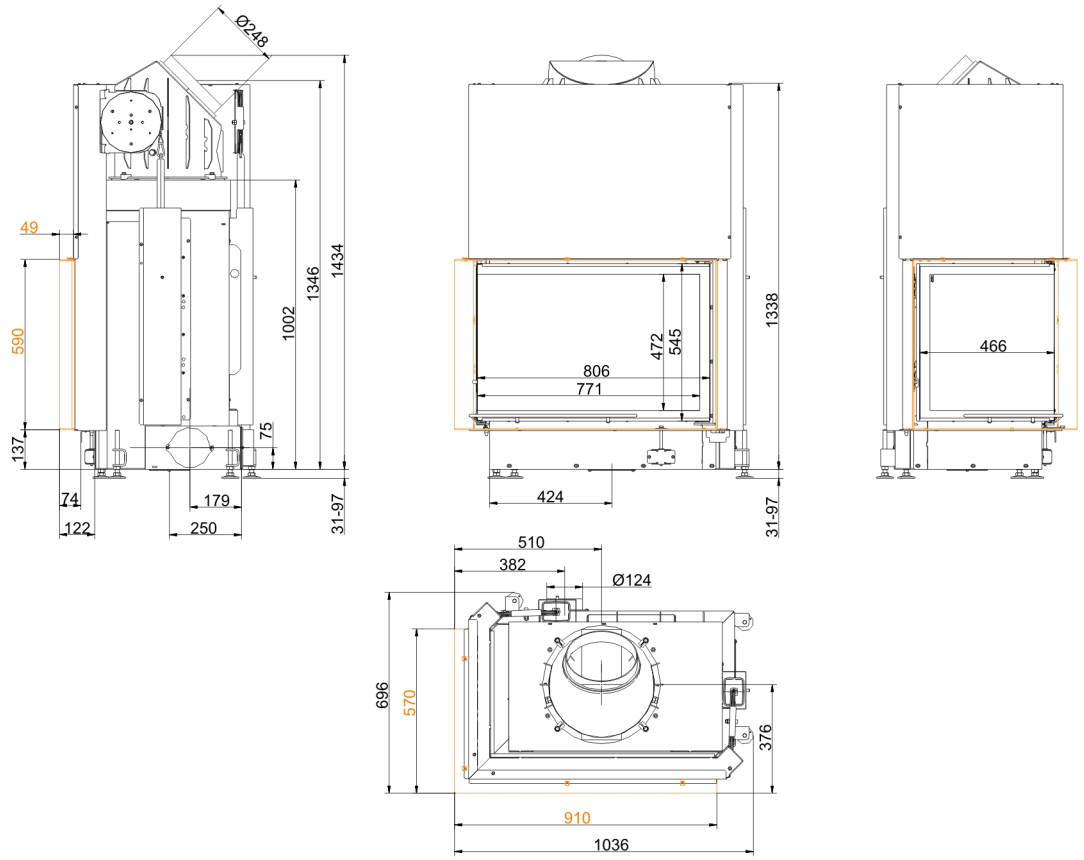

… left with mounting frame 50 mm

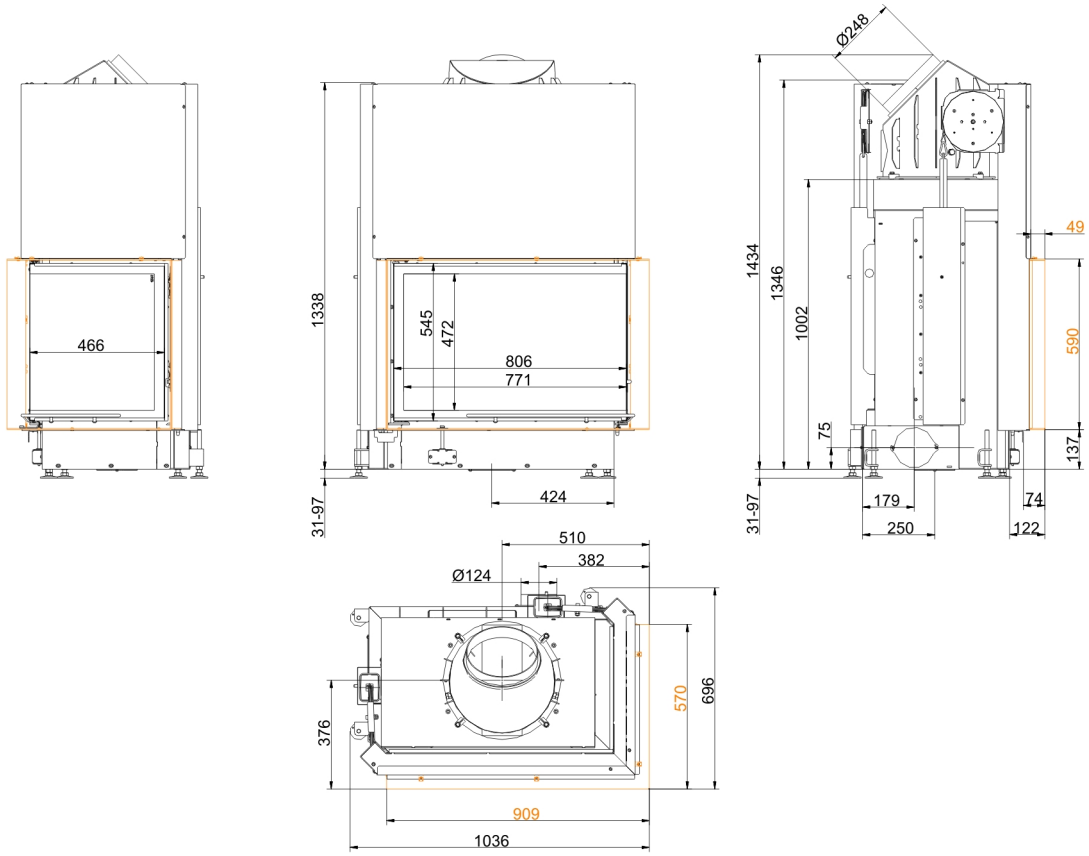

… right with mounting frame 50 mm

Dimension sheets - Eck-Kamin 57/82/48 lifting door (easy-lift)

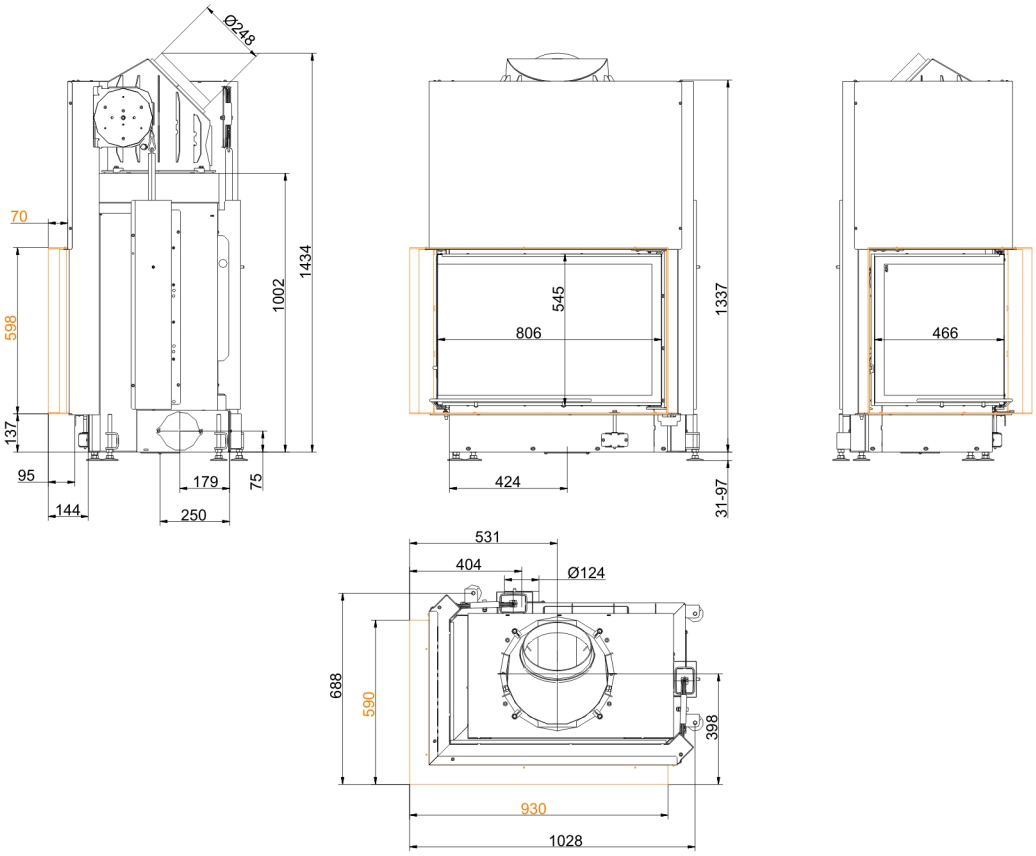

… left with mounting frame 70 mm

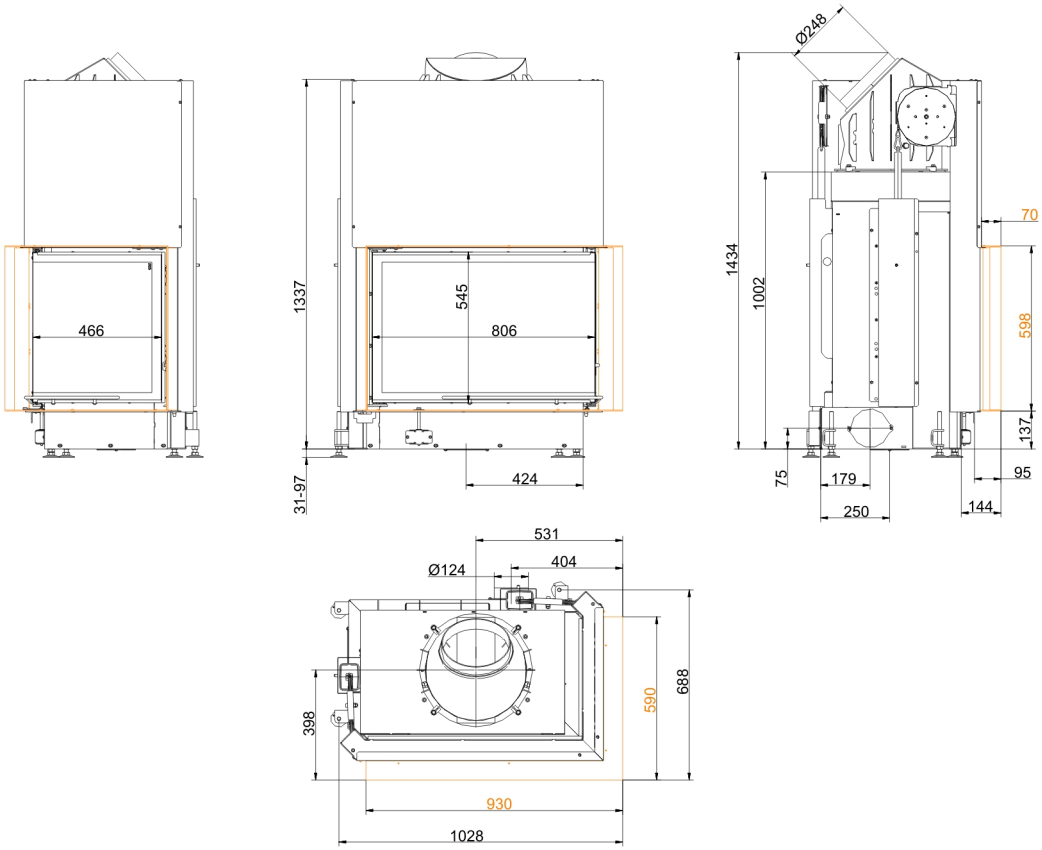

… right with mounting frame 70 mm

We suggest for CAD planing Palette CAD. Permanent updated drawings: www.brunner.de
Frames / front versions are marked colored.

Planning and installation - Eck-Kamin 57/82/48 lifting door (easy-lift)

Tested according to		EN 13229 W	EN 13229 WA	EN 13229 W
Values measured at		Rated capacity	Accumulation	Open
Suitable for all construction types according to rules		OK	OK	OK
EEI		105.7	105.7	105.7
Data for functional demonstration				
Rated heat power	kW	12	-	-
Fire wood volume	kg/h	3.6	5	3.5
Combustion performance	kW	16	22	16
Flue gas mass flow	g/s	11	19	90
Outlet temperature (before heating surface)	°C	-	325	-
Flue gas temperature after:				
attached steel smoke hood	°C	195	260	118
1 x adjoining cast iron radiator (GNF 8/10)	°C	-	142	-
6 x accumulation rings (MAS) 1)	°C	-	200	-
2 m ceramic accumulator 2)	°C	-	180	-
1,4 m accumulation stones (MSS) 2)	°C	-	180	-
Necessary supply pressure	Pa	12	15	9
Combustion air consumption	m^3/h	32	50	220
Efficiency	%	80	80	-
Combustion air connection Ø	mm	125	125	-
Heat distribution				
Insert / heat accumulator	%	25 / 30	25 / 30	-
Glass pane (single / double)	%	45 / -	45 / -	-
Cross-section of gratings 3)				
Supply air	cm^2	700 / 100 / 400	700 / 100 / 400	-
Warm air	cm^2	700 / 100 / 400	700 / 100 / 400	-
Minimal oven surface for closed construction type				
Heat dissipating surface	m^2	5	5	-
Min. distances of fireplace without / with convection casing				
to insulation layer	cm	8	8	8
to mounting floor	cm	15	15	15
Thermal insulation without / with air gratings 4)				
Mounting wall	cm	14 / 10	14 / 10	14 / 10
Floor	cm	2 / 2	2 / 2	2 / 2
Ceiling	cm	19 / 14	19 / 14	19 / 14
Brick lining for combustible wall	cm	10	10	10
Weight				
Fireplace / combustion room	kg		255 / 82 / -	
Meets requirement/limit values for:				
Germany/ Austria / Suisse / Norway		1.BImSchV (Stufe 2) / 15a BVG (2015) / LRV / NS 3059		- / - / - / NS 3059

1) Damper flap recommended
2) Approximate value. Proof of function provided by calculation required
3) for fireplace inserts / flue gas pipe / metallic reheating surface
4) Values determined with upper air sections; stove cladding is heat emitting.

Ulrich Brunner GmbH
Zellhuber Ring 17 - 18
D-84307 Eggenfeldern
Telefonat: +49 / (0)87 21 / 7 71-0
Telefax: +49 / (0)87 21 / 7 71-100
info@brunner.de | www.brunner.de

BRUNNER®
made in germany.